Hurtman Rescue Pole

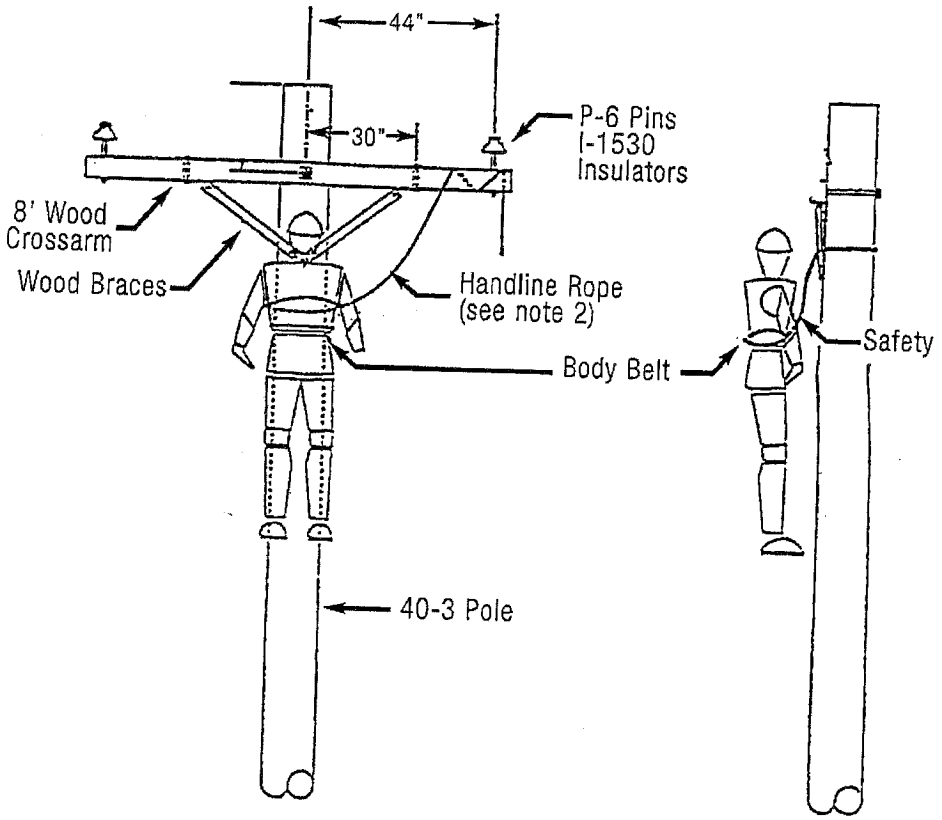

Notes:

1. Do not use locknuts anywhere.
2. Lineman is to use one complete loop of rope over crossarm. With rope going from inside the pin to outside the pin. Use three half hitches on dummy, under the arm pit. I splice cannot be part of the half hitches.